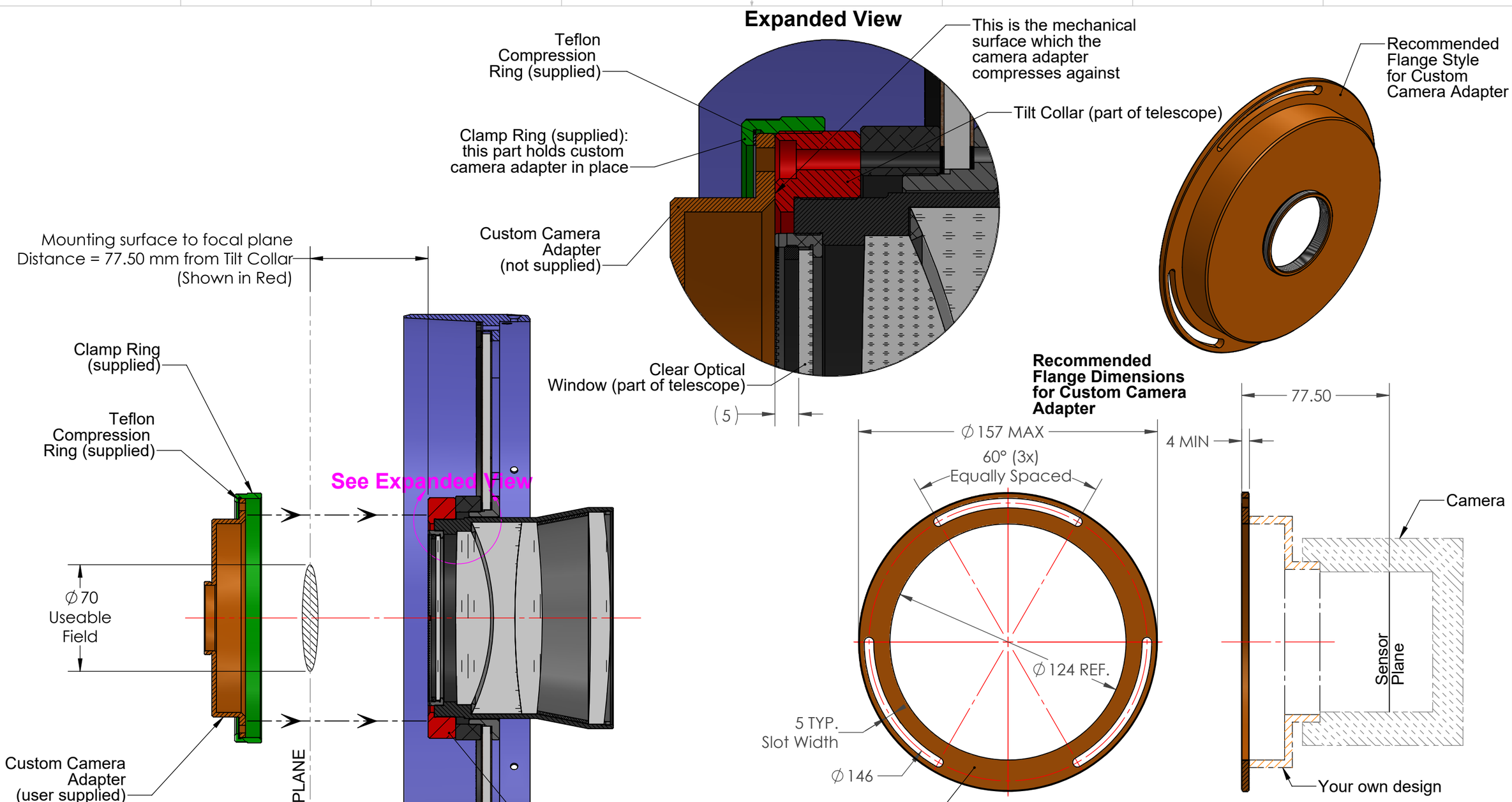

RASA36cm Front Cell

PROPRIETARY AND CONFIDENTIAL

THE INFORMATION CONTAINED IN THIS DRAWING IS THE SOLE PROPERTY OF CELESTRON, LLC. ANY REPRODUCTION IN PART OR AS A WHOLE WITHOUT THE WRITTEN PERMISSION OF CELESTRON, LLC IS PROHIBITED.

UNLESS OTHERWISE SPECIFIED:	THIRD ANGLE PROJECTION	NAME	DATE
DIMENSIONS ARE IN MILLIMETER TOLERANCES: ANGULAR: MACH ± 0.50 TWO PLACE DECIMAL ±0.35 THREE PLACE DECIMAL ±0.100	DRAWN	-	.
	CHECKED	-	.
	ENG APPR.		
	MFG APPR.		
INTERPRET GEOMETRIC TOLERANCING PER:	Q.A.		
MATERIAL	COMMENTS:		
FINISH -			
DO NOT SCALE DRAWING			

CELESTRON 2835 Columbia St. Torrance, CA 90503

TITLE: Recommendation for Customized Adapter (RASA36cm)

SIZE	DWG. NO.	REV
B	-	A

SCALE: 1:2.5 WEIGHT: . SHEET 1 OF 1